3M SSU Boiler Stage

3M SSU BOILER-DATASHEET

SKY CLIMBER®
Access Innovations
Since 1955

Description

- Sky Stage Ultra Boiler is a modular platform that can break down and fit into hard to reach spaces or boiler openings.

CAD generated drawing.
Do not manually update.

First angle projection

Scale
1:25

Information

- 3 Meter Sky Stage Ultra Boiler configuration.
- Folds to fit through openings as small as 18" round.
- 1250 lb load rating from 1M to 6m lengths.
- 1000 lb load rating from 7M to 9M lengths.
- Components unfold to provide full-size platforms.
- Adjustable hand rails add versitality and increase work surface space.

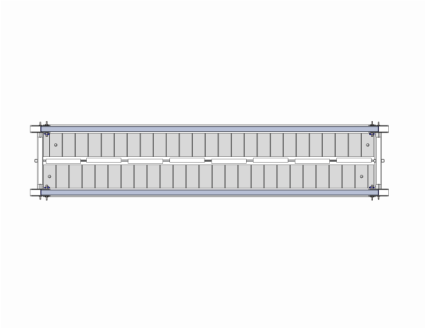

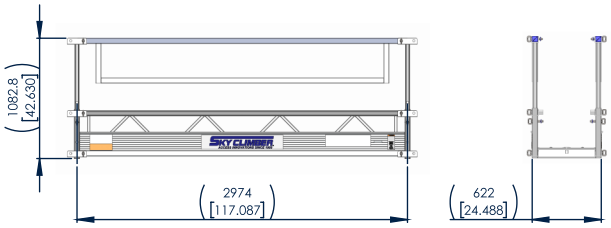

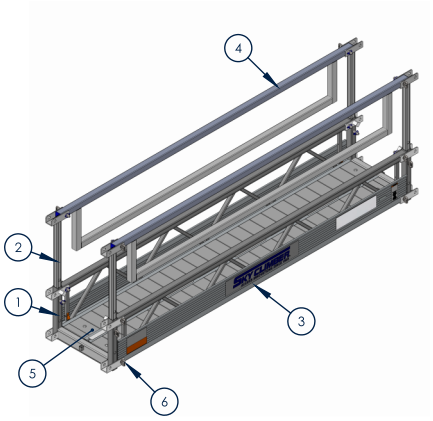

ITEM NO.	PART NUMBER	DESCRIPTION	QTY.
1	361015	BV Connection Frame Weldment	2
2	361014	Bv Telescoping Post Weldment	4
3	361019	Side Panel - 3 Meter	2
4	361010	BV Top Rail Assem - 3 Meter	2
5	361021	3m BV Floor	1
6	360019	Lock Pin Assembly	16

INFORMATION	3M SSU BOILER-DATASHEET
Dimensions	**117.087" x 24.488" x 42.630" (LxWxH)**
Material	**Aluminum**
Weight	**191.5 lbs**

The information contained in this drawing is the sole property of Sky Climber. Any reproduction in part or whole without the written permission of Sky Climber is prohibited.

© 2026 Sky Climber, LLC. All rights reserved. Specifications subject to change without notice.

Sky Climber, LLC | 1600 Pittsburgh Drive Delaware, OH 43015
info@skyclimber.com | 800.255.4629 | www.skyclimber.com