1M SSU

1M SSU-DATASHEET

SKY CLIMBER®
Access Innovations
Since 1955

Description

- Sky Stage Ultra (SSU) is a modular platform that combines the best of current technology with new concepts.
- SSU Platforms are highly configurable and used across a wide variety of industries.

CAD generated drawing.
Do not manually update.

First angle projection

Scale
1:15

Information

- 1 Meter Sky Stage Ultra (SSU) configuration.
- Stage load capacity is determined once full stage is built, including all hoists and additional accessories.

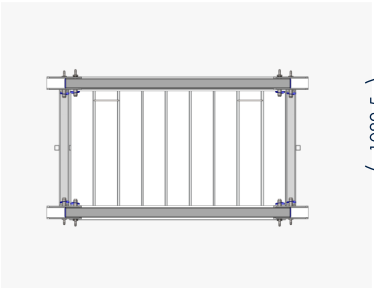

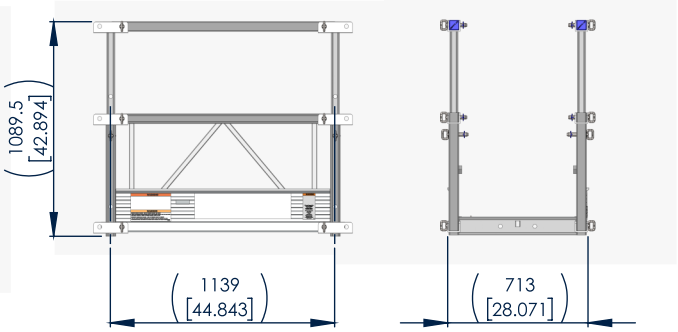

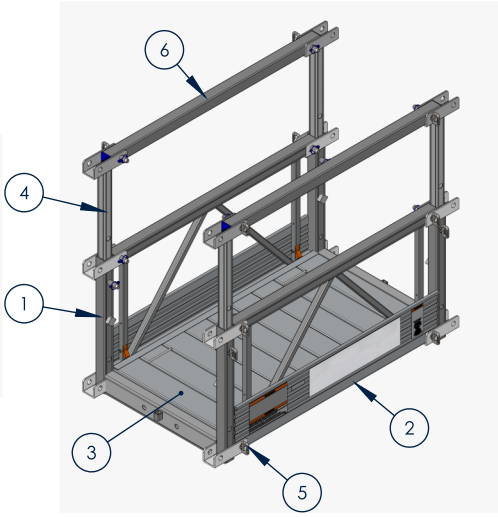

ITEM NO.	PART NUMBER	DESCRIPTION	QTY.
1	360039	Connection Frame Weldment	2
2	360031	Side Panel - 1 Meter	2
3	360040	Floor Panel - 1 Meter	1
4	360054	Telescoping Post Weldment	4
5	360019	Lock Pin Assembly	16
6	360146	Top Rail Assembly - 1 Meter	2

INFORMATION	1M SSU-DATASHEET
Dimensions	**44.843"x28.071"x42.894" (LxWxH)**
Material	**Aluminum**
Weight	**94.5 lbs**

The information contained in this drawing is the sole property of Sky Climber. Any reproduction in part or whole without the written permission of Sky Climber is prohibited.

© 2026 Sky Climber, LLC. All rights reserved. Specifications subject to change without notice.

Sky Climber, LLC | 1600 Pittsburgh Drive Delaware, OH 43015
info@skyclimber.com | 800.255.4629 | www.skyclimber.com